WIRING, CALIBRATION AND PROGRAMMING

Digital Display Option R
Digital Display Accessory DR-1

Table of Contents

Page

1. Installation and Wiring 1
1.1 General 1
1.2 Wiring built-in digital readout 2
1.3 Wiring remote digital readout 3
1.4 Wiring pulse output 3

2. Programming Definitions 4

3. Programming Flowchart 6

4. Error Codes 8

5. Battery Replacement 8

6. Dimension drawing (DR-1) 8

7. Specifications 9

Figures

Figure 1 Wiring built-in digital readout 1
Figure 2 Wiring remote digital readout 2
Figure 3 Obtaining a voltage pulse output 3
Figure 4 Pulse output schematic 3
Figure 5 Pulse shape 3
Figure 6 Dimension drawing remote readout (DR-1) 8

1. Installation & Wiring

1.1 General

This manual covers the wiring and programming of the digital display which is installed directly in the Flo-Gage housing (Option R) and also the accessory display for remote mounting (model DR-1).

This display provides up to 4 1/2 digits for rate display and 8 digits for totalization. The display incorporates a microprocessor for scaling and selectable square root extraction. An isolated, scaled open collector output is included for operating a remote contact closure for remote totalization. See figure 3 to convert this output to a voltage output.

The digital indicator requires a 4-20 mA dc signal which is provided by transmitter options W2 or W3.

Northeast Controls Incorporated
P.O. Box 275 - 123 Pleasant Avenue
Upper Saddle River, New Jersey 07458 USA
Tel: 201-327-7660 | Fax: 201-327-3242
email: sales@northeastcontrolsinc.com
www.northeastcontrolsinc.com

1. Installation & Wiring (Continued)

1.2 Wiring built-in digital readout

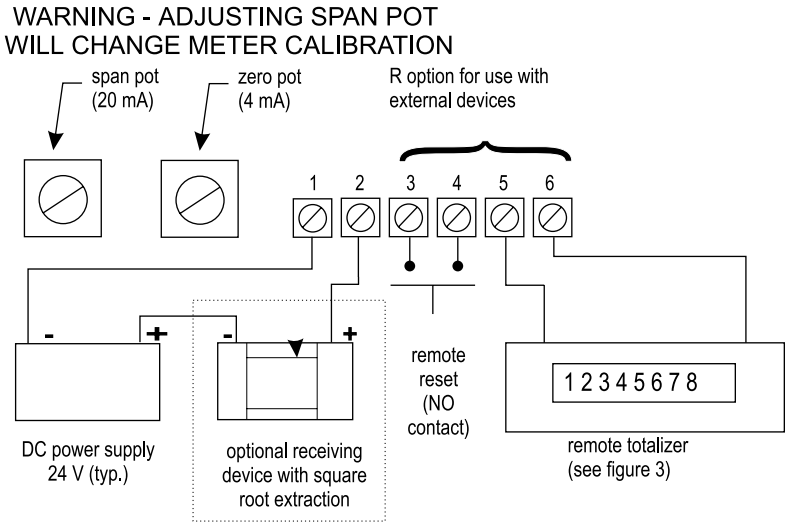

Figure 1

1.3 Wiring remote digital readout

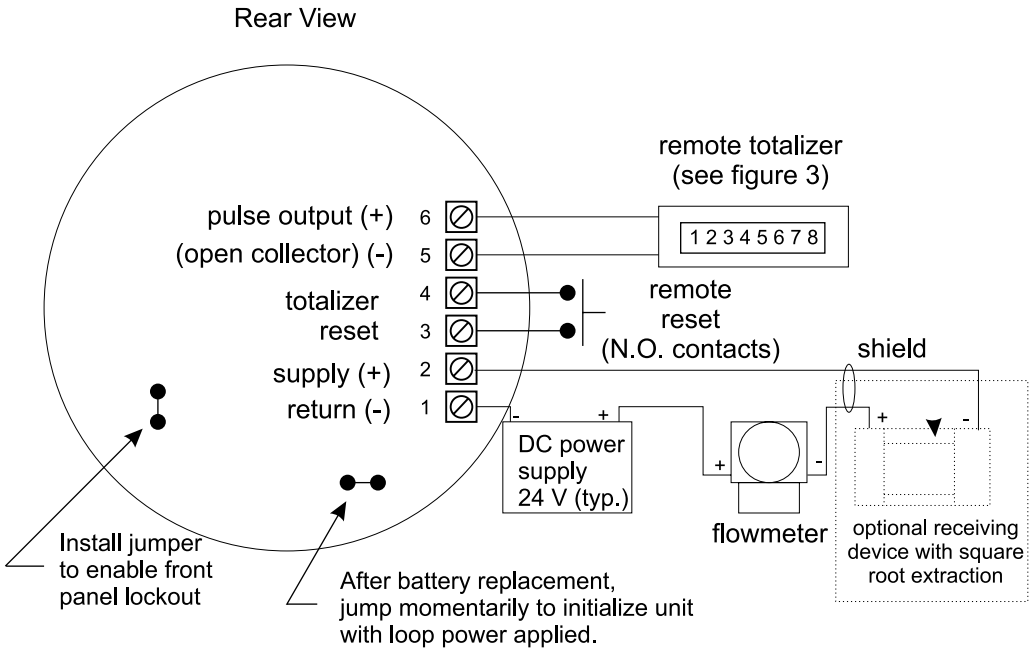

Figure 2

1.4 Wiring the pulse output

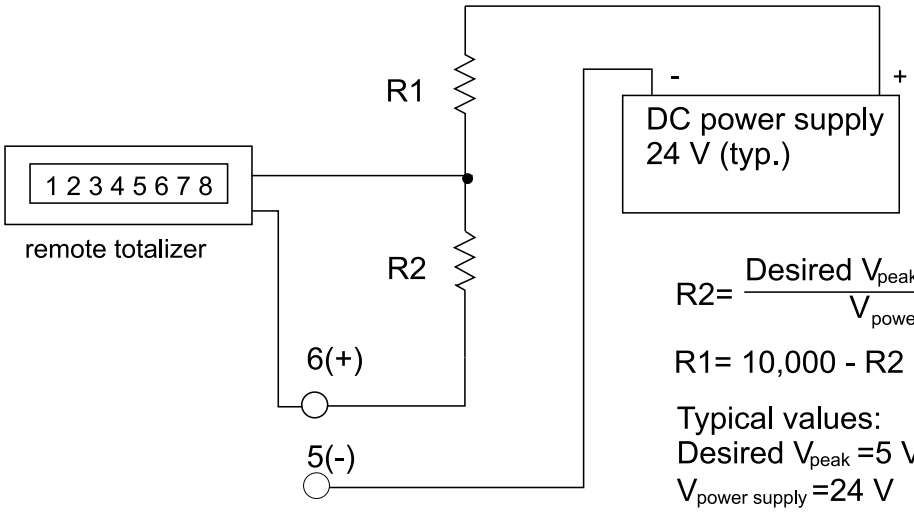

$$R2 = \frac{\text{Desired } V_{peak} \times 10{,}000}{V_{\text{power supply}}}$$

R1= 10,000 - R2

Typical values:
Desired V_{peak} =5 V
$V_{\text{power supply}}$ =24 V
R2=2000 (2 K ohms)
R1=8000 (8 k ohms)
Actual V_{peak} =4.8V
2% resistors, ¼ watt

Figure 3
Obtaining a Voltage Pulse Output

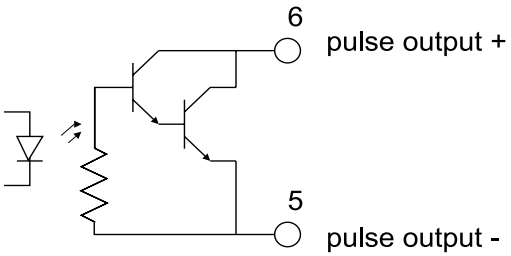

Figure 4
Pulse Output Schematic

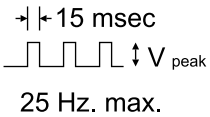

Figure 5
Pulse Shape

Caution: Observe proper polarity when connecting the pulse output. The pulse output circuitry can be damaged by reserve polarity or by voltages exceeding 30 volts.

2. Definitions

ent code: (enter code) This prompt will only appear if the panel lock is ON. Enter the password code to enter the program menu. Press the ↑ key to increment each digit. Press the ← key to step to the next digit to the left. Press the **E** key to enter the 4 digit code. If the entered code is correct, the display will advance to the next menu prompt (CLr tot). If incorrect, the display will return to the run mode.

clr tot: (clear total) Clears (resets) the totalizer. Press the **E** key to clear the total and return to the run mode. Press the **M** key to skip and advance to the next menu selection.

3 or 4: (3.5 or 4.5 digits) Choose between 3.5 or 4.5 digit rate display. Press the ↑ key to step to the desired choice. Press the **E** key to enter the displayed choice.

dec loc: (Decimal Location for ratemeter) Sets the decimal location for the ratemeter and the rate lo & rate hi settings. Press the ← key to move the decimal. Press the **E** key to enter the displayed decimal location.

tdec: (totalizer decimal) Sets the decimal location for the totalizer. The totalizer decimal is not a dummy decimal and will scale the totalizer display accordingly. (i.e. if the tdec is set in the tenths position (1234567.8), 100 will be displayed as 100.0). The location of the decimal point allows for greater resolution of both the totalizer display and the pulse output. The pulse output advances at a rate dependent on the least significant digit of the totalizer. The totalizer decimal location is restricted to a maximum of 4 places (1234.5678).

tot desc: (totalizer descriptor) This allows you to illuminate one of the available descriptors on the display (GAL, LIT, FT3, M3 or "blank"). Press the ↑ key to select the descriptor. Press the **E** key to enter the selected descriptor.

rat desc: (ratemeter descriptor/scaling) Sets the rate readout. Choose rate per hour, minutes, seconds or "blank" (when no descriptor is selected the unit assumes that the rate lo and rate hi are entered in units per second). Press the ← key to step to the desired choice. Press the **E** key to enter the illuminated descriptor.

input: (input type) Choose between linear (lin) or Square Root Extraction (SQ.u) . Press the ↑ to step to the desired input type. Press the **E** key to enter the displayed choice.

rate lo: (rate low) Sets the low setting for the 4-20 mA analog input. Key in the low rate value which corresponds to the 4mA input. Press the ↑ key to increment each digit. Press the ← key to step to the next digit to the left. Press the **E** key to enter the displayed rate lo value.

rate hi: (rate high) Sets the high setting for the 4-20 mA analog input. Key in the high rate value which corresponds to the 20mA input. Press the ↑ key to increment each digit. Press the ← key to step to the next digit to the left. Press the **E** key to enter the displayed rate hi value.

lo cut: (low cutoff) Percent of input (0.1 to 9.9) below which all inputs will assume the rate lo value. (i.e. With lo cut set at 9.9 and rate lo set at 0, all inputs below 5.6 mA will read 0)

pulseout: (pulse out divider) This allows the unit to output a pulse for each least significant total count divided by the selected divider. The pulse out can be divided by 1 (d 1), 10 (d 10), 100 (d 100), or turned off (off). With the divider set at 1, the unit will give a pulse out for every increment of the LSD displayed.

2.

Definitions
(Continued)

cal: (calibrate; yes or no) Select YES to calibrate the unit, select no to skip the calibration procedure. Press the ↑ key to select YES or NO. Press the **E** key to enter the displayed selection.

cal LO: (calibrate low) Apply an accurate 4 mA signal to the input and press the **E** key. If the calibration is successful the unit will display "DONE cal lo". If the calibration is not successful the display will read "DONE cal err" see error codes page 8. Press the **M** key to continue.

cal hi: (calibrate high) Apply an accurate 20 mA signal to the input and press the **E** key. If the calibration is successful the unit will display "DONE cal hi". If the calibration is not successful the display will read "DONE cal err" see error codes page 8. Press the **M** key to continue.

loc code: (lock code) Sets the 4 digit lock code to be entered when the unit prompts ent code. This allows the user to gain access to the menu when the unit is locked. Press the ↑ key to increment each digit. Press the ← key to step to the next digit to the left. Press the **E** key to enter the displayed code. **Record this number here for later use!**

LOCK CODE _____

loc unit: (lock unit) Sets the panel lock ON or OFF. Press the ↑ key to select yes (ON) or no (OFF). Press the **E** key to enter the displayed selection.

NOTE: A hardware jumper menu lockout is also available. (see Figure 2). The hardware jumper doe not inhibit contact closure reset at terminals 3 and 4.

3. Programming Flowchart

NOTE: All menu selections are saved upon exiting the program menu and returning to the run mode. When making menu changes, do not remove loop power until returning to the run mode.

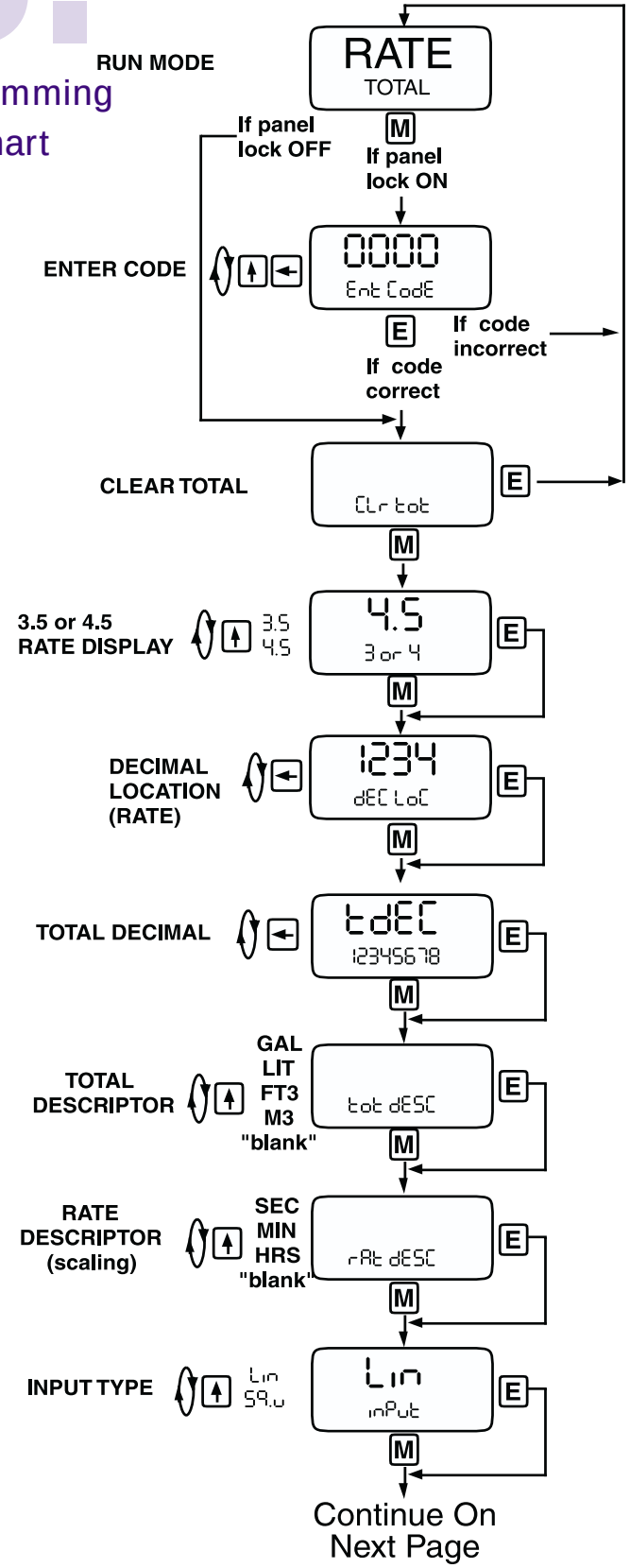

Continue On Next Page

Press the **M** key to enter the programming menu.

If the panel lock is on, you must enter the 4 digit lock code to gain access to the menu.

Press the ↑ key to increment each individual digit of the code.
Press the ← key to advance to the next digit.
Press the **E** key to enter the displayed code.
If the code is correct, display advances to "clr tot", if not, display returns to run mode
Press the **E** key to clear the totalizer and return to the Run Mode
Press the **M** key to skip and go to next menu item.

Press the ↑ key to step to the desired number of digits for the rate display.
Press the **E** key to enter the displayed choice.
Press the **M key** to skip and keep the existing choice.
Press the ← key to step the decimal to the next digit.
Press the **E** key to enter the displayed decimal location.
Press the **M key** to skip and keep the existing decimal location.
Press the ← key to step the decimal to the next digit.
Press the **E** key to enter the displayed decimal location.
Press the **M key** to skip and keep the existing decimal location.

Press the ↑ key to step to the desired totalizer descriptor.
Press the **E** key to enter the displayed descriptor.
Press the **M** key to skip and keep the existing descriptor.

Press the ↑ key to step to the desired rate descriptor.
Press the **E** key to enter the displayed descriptor.
Press the **M** key to skip and keep the existing descriptor.
(Choose the descriptor which reflects the time base used for rate high)

Press the ↑ key to step to the desired input type.
Press the **E** key to enter the displayed choice.
Press the **M** key to skip and keep the existing input type.

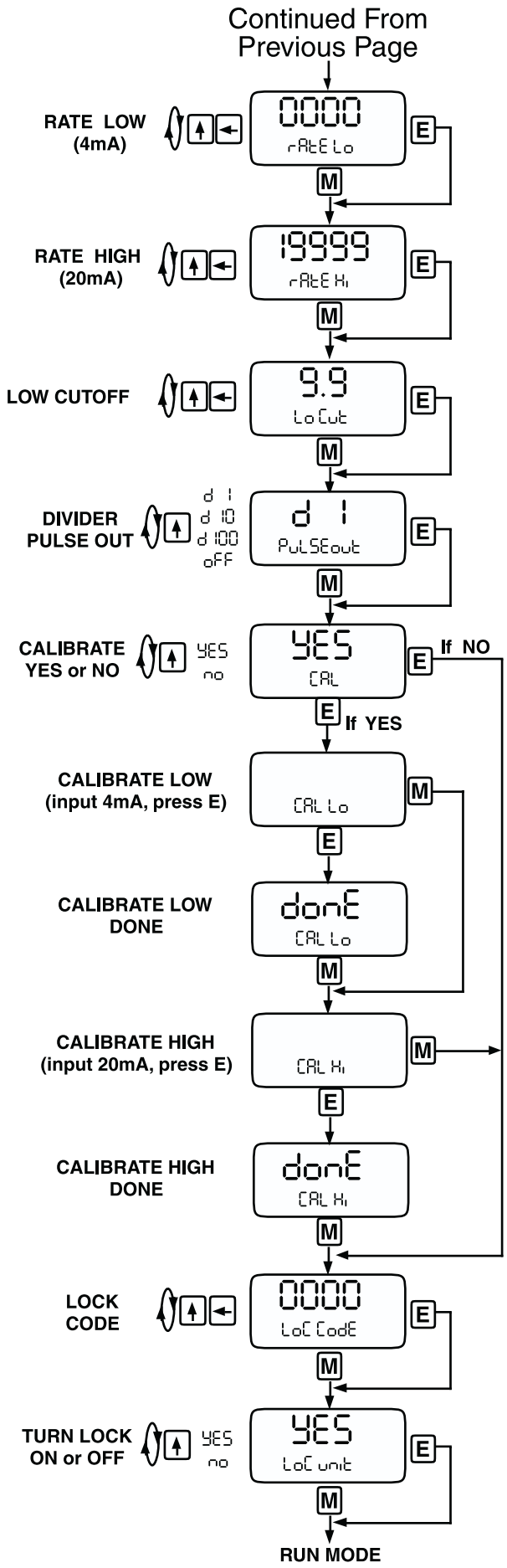

Press the ↑ key to increment each individual digit of the rate low setting.
Press the ← key to advance to the next digit.
Press the **E** key to enter the displayed value.
Press the **M** key to skip and keep the existing value.

Press the ↑ key to increment each individual digit of the rate high setting.
Press the ← key to advance to the next digit.
Press the **E** key to enter the displayed value.
Press the **M** key to skip and keep the existing value.

Press the ↑ key to increment each individual digit of the low cutoff setting.
Press the ← key to advance to the next digit.
Press the **E** key to enter the displayed value.
Press the **M** key to skip and keep the existing value.

Press the ↑ key to step to the desired divider for the pulse output.
Press the **E** key to enter the displayed divider.
Press the **M** key to skip and keep the existing divider.

Press the ↑ key to step to cal YES or cal NO.
Press the **E** key to enter the displayed choice.
Press the **M** key to skip and proceed to loc code.

Press the **E** key when 4mA is supplied to the input.
Press the **M** key to skip and proceed to cal hi.

Done will appear to signal that the cal lo was successful.
Press the **M** key to advance to cal hi.

Press the **E** key when 20mA is supplied to the input.
Press the **M** key to skip and proceed to loc code.

"Done" will appear to signal that the cal hi was successful.
Press the **M** key to advance to loc code.

Press the ↑ key to increment each individual digit of the lock code.
Press the ← key to advance to the next digit.
Press the **E** key to enter the displayed code.
Press the **M** key to skip and keep the existing code.

Press the ↑ key to step to the desired lock setting.
Press the **E** key to enter the displayed lock setting.
Press the **M** key to skip and keep the existing setting.

ERROR CODES

4. Error Codes

0000
RATE ERR

This error message is displayed when the "RATE LO" value is set equal to or higher than the "RATE HI" value. Press **M** to re-enter the "RATE LO" and "RATE HI" values.

done
cal ERR

This error message is displayed when the "CAL LO" or "CAL HI" input is set at a value which is out of range (see "CAL LO" and "CAL HI" in programming section for calibrating input ranges). Press **M** to re-enter the "CAL LO" and/or "CAL HI" procedure.

e battry

If a low battery / invalid memory condition is detected, the display will flash and the "BAT" descriptor will come on. Press **M** to acknowledge the condition, E BATTERY will be displayed. Replace the battery, reinitialize and recalibrate the unit. (see "Battery Replacement" below).

e pulse

This error message is displayed when the total is advancing at a speed greater than the pulse output capability. Choose a greater pulse divider or select "OFF".

5. Battery Replacement

Recommended battery: Panasonic BR2330

The polarity of the battery must be correct. Plus (+) must be on top as indicated on the conductor arm.

Note: Power the unit from the 4-20 mA loop while the battery is being replaced to avoid the need to recalibrate the unit. The unit **must** be powered by the loop and reinitialized immediately after battery replacement to prevent early battery discharge.
All menu items must be re-entered. The unit must be recalibrated if loop power was not maintained.

6. Dimensions

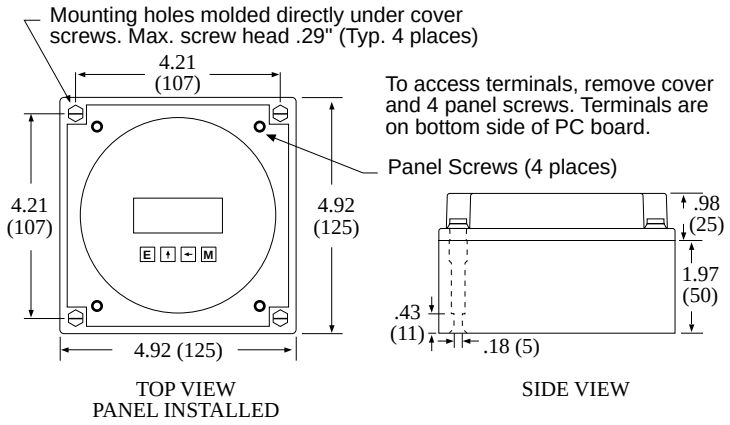

Figure 6
Dimensions - Remote Readout DR-1

7. Specifications

Description:
Featuring up to 4 1/2 digits of rate and 8 digits of total, the digital indicator is a loop powered indicator capable of accepting either linear or square root 4-20 mA inputs. An isolated scaled pulse output is available for hook up to a remote totalizer. Numeric password protection prevents unauthorized access to menu.

Specifications:
POWER:
Loop powered 4-20 mA
Internal Battery (Memory only):
3 V 250 mA-H Lithium (2 yr. Standby life)

DISPLAY:
Rate Display: (selectable decimal)
3.5 or 4.5 Digits (selectable), 0.35" High, Display updates once every two seconds.
Rate Descriptors: /SEC, /MIN, /HR or "blank"
Totalizer Display: (selectable decimal)
8 Digits (99999999), 0.2" High
Totalizer Descriptors: GAL, LIT, FT3, M3, "blank"
Low Battery Error Detection: "BAT" descriptor & flashing display
Under/Over range Indication: Display flashes when out of range

ENVIRONMENTAL:
OPERATING TEMPERATURE
-4°F (-20°C) to + 158°F (70°C)
Extended Temp: -22°F (-30°C) to + 158°F (70°C)
HUMIDITY
0 - 90% Noncondensing

ACCURACY: (Rate @ 20°C)
0.1% Full Scale Resolution, ±1 count
Temperature Drift:
50 ppm/°C Typical
200 ppm/°C Worst Case

LOCKOUT:
Password: Unauthorized menu changes can be prevented by entering a user selectable password (5 digit number).
Jumper: An internal jumper shunt is provided for applications requiring a "sealed" menu and totalizer lockout. Install the jumper to enable the lock. (see Typical Wiring, Pg. 2)

INPUTS:
Signal Input:
Full Scale Range: 4 to 20 mA DC
Loop Voltage Drop: 6 Volts Maximum
Reverse Polarity Protected
Over Current Protection to 60 mA
16 Bit resolution; 1 sample every 2 secnds
Low Cutoff supplied to inhibit indications at low flow rates.
Reset Input: (contact closure)
Internal Pullup Resistor: 100 ký to +3 VDC
High (logic 1): Open or 3-30 VDC
Low (logic 0): Less Than .5 VDC
Minimum On : 25 msec
NOTE: The reset input is not protected by the password or jumper lockout.
CAUTION: Sustained contact closures will shorten battery life.

PULSE OUTPUT:
The pulse output advances with the least significant digit of the totalizer.
Type: Opto-isolated open collector transistor.
Max. voltage (off state): 30 VDC
Current (on state): 5 mA @ .9 V drop, .1mA @ .7 drop
Pulse Duration: 15 msec
Pulse Output Rate: 25 CPS max.
Pulse output divider: User selectable: ÷1, ÷10, ÷100 or off

CALIBRATION & OPERATION:
Input Scaling: Via front keypad
Calibration: Via front keypad
Decimal Point: Via front keypad
Reset Input: Via front keypad or remote dry contact closure
Keypad: 4 tactile feedback keys

Northeast Controls Incorporated
P.O. Box 275 - 123 Pleasant Avenue
Upper Saddle River, New Jersey 07458 USA
Tel: 201-327-7660 | Fax: 201-327-3242
email: sales@northeastcontrolsinc.com
www.northeastcontrolsinc.com